SOIL EROSION AND SEDIMENTATION CONTROL NOTES AND MAINTENANCE PROGRAM:

1. ONLY LIMITED UP–SLOPE DISTURBANCE WILL BE PERMITTED TO PROVIDE ACCESS TO ANY SEDIMENT BASINS, SEDIMENT TRAPS, DIVERSION CHANNELS, AND OTHER CONTROL MEASURES FOR GRADING AND ACQUIRING BORROW TO CONSTRUCT THOSE CONTROLS AS REQUIRED.

2. EROSION AND SEDIMENTATION CONTROLS MUST BE CONSTRUCTED, STABILIZED, AND FUNCTIONAL BEFORE GENERAL SITE DISTURBANCE WITHIN THE TRIBUTARY AREAS OF THOSE CONTROLS.

3. AFTER FINAL SITE STABILIZATION HAS BEEN ACHIEVED, TEMPORARY EROSION AND SEDIMENTATION CONTROL MUST BE REMOVED. AREAS DISTURBED DURING REMOVAL OF THE CONTROLS MUST BE STABILIZED.

4. VEHICLES MAY ONLY ENTER AND EXIT AT THE LOCATION OF APPROVED CONSTRUCTION ENTRANCES.

5. STOCK PILE HEIGHTS MUST NOT EXCEED 35 FEET NOR SHALL THE SIDE SLOPES EXCEED 2:1. STOCK PILES SHALL BE LOCATED ON SITE BY THE CONTRACTOR AT LOCATIONS APPROVED BY THE COUNTY CONSERVATION DISTRICT.

6. UNTIL THE SITE IS STABILIZED, ALL EROSION AND SEDIMENTATION CONTROLS MUST BE MAINTAINED PROPERLY. MAINTENANCE MUST INCLUDE INSPECTIONS OF ALL EROSION AND SEDIMENTATION CONTROLS AFTER EACH STORM EVENT AND ON A WEEKLY BASIS. ALL PREVENTATIVE AND REMEDIAL MAINTENANCE WORK, INCLUDING CLEANOUT, REPAIR, REPLACEMENT, RE–GRADING. RE–SEEDING, RE–MULCHING, AND RE–NETTING MUST BE PERFORMED IMMEDIATELY.

7. SEDIMENT MUST BE REMOVED FROM SEDIMENT CONTROL FACILITIES WHEN STORAGE CAPACITIES ARE REDUCED. DISPOSAL OF SEDIMENT SHALL BE IN ACCORDANCE WITH LOCAL & STATE RULES & REGULATIONS.

8. ANY SEDIMENT BASINS AND SEDIMENT TRAPS MUST BE PROTECTED FROM UNAUTHORIZED ACTS OF THIRD PARTIES.

9. CLEANOUT STAKES MUST BE PROVIDED AT HALF DISTANCES FROM THE POINT OF CONCENTRATED INFLOWS INTO THE BASINS AND TRAPS TO THE OUTLET STRUCTURE. SEDIMENT SHALL BE REMOVED WHEN ACCUMULATIONS ON ONE–HALF OF THE STAKES (IF MORE THAN ONE) REACH THE CLEANOUT ELEVATION.

10. SILT FENCING MUST BE INSTALLED PARALLEL TO EXISTING CONTOURS OR CONSTRUCTED LEVEL ALIGNMENTS. ENDS OF FENCING MUST EXTEND 4', TRAVELING UP–SLOPE AT 45° TO THE ALIGNMENT OF THE MAIN FENCING SECTION.

11. SEDIMENT MUST BE REMOVED WHERE ACCUMULATIONS REACH ONE–HALF THE ABOVE GROUND HEIGHT OF THE SILT FENCING.

12. ANY SILT FENCING THAT HAS BEEN UNDERMINED OR TOPPLED MUST BE REPLACED WITH ROCK FILTER OUTLETS IMMEDIATELY.

13. ALL STORMWATER INLETS MUST BE PROTECTED UNTIL THE TRIBUTARY AREAS ARE STABILIZED. INLETS WHICH DO NOT DISCHARGE TO A SEDIMENT TRAP OR SEDIMENT BASIN MUST BE PROTECTED UNTIL THE TRIBUTARY AREAS ARE STABILIZED.

14. ALL EROSION AND SEDIMENTATION CONTROL MEASURES MUST BE INSPECTED WEEKLY AND AFTER EVERY RUNOFF EVENT.

15. ANY DIVERSION CHANNELS, SEDIMENT BASINS, SEDIMENT TRAPS, DIVERSION BERMS, AND STOCKPILES MUST BE SEEDED AND MULCHED IMMEDIATELY.

16. THE CONTRACTOR WILL BE RESPONSIBLE FOR THE PROPER CONSTRUCTION, STABILIZATION, AND MAINTENANCE OF ALL EROSION AND SEDIMENTATION CONTROLS AND RELATED ITEMS INCLUDED ON THIS PLAN.

17. THE CONTRACTOR MUST DEVELOP, AND HAVE APPROVED BY THE COUNTY CONSERVATION DISTRICT, A SEPARATE EROSION AND SEDIMENTATION CONTROL PLAN FOR EACH SPOIL, BORROW, OR OTHER WORK AREA NOT DETAILED HEREIN, WHETHER LOCATED WITHIN OR OUTSIDE OF THE CONSTRUCTION LIMITS.

18. SHOULD ANY MEASURES CONTAINED WITHIN THIS PLAN PROVE INCAPABLE OF ADEQUATELY REMOVING SEDIMENT FROM ON–SITE FLOWS PRIOR TO DISCHARGE OR STABILIZING THE SURFACES INVOLVED, ADDITIONAL MEASURES MUST BE IMMEDIATELY IMPLEMENTED BY THE APPLICANT TO ELIMINATE ALL SUCH PROBLEMS.

19. SHOULD UNFORESEEN EROSIVE CONDITIONS DEVELOP DURING CONSTRUCTION, THE CONTRACTOR SHALL TAKE ACTION TO REMEDY SUCH CONDITIONS AND TO PREVENT DAMAGE TO ADJACENT PROPERTIES AS A RESULT OF INCREASED RUNOFF AND/OR SEDIMENT DISPLACEMENT. STOCKPILES OF WOOD CHIPS, HAY BALES, CRUSHED STONE AND OTHER MULCHES SHALL BE HELD IN READINESS TO DEAL IMMEDIATELY WITH EMERGENCY PROBLEMS OF EROSION.

20. THE CONTRACTOR SHALL BE RESPONSIBLE FOR PROTECTION OF EXISTING TREES AND SHRUBS TO REMAIN FROM UNNECESSARY DAMAGE.

21. A COPY OF THE APPROVED EROSION AND SEDIMENTATION CONTROL PLAN (E&SPC) MUST BE POSTED AT THE CONSTRUCTION SITE AT ALL TIMES IN ACCORDANCE PATH THE LAWS OF THE COMMONWEALTH OF PENNSYLVANIA.

22. THE CONTRACTOR IS ADVISED TO BECOME THOROUGHLY FAMILIAR WITH THE PROVISIONS TITLE 25, PART 1, DEPARTMENT OF ENVIRONMENTAL PROTECTION, SUB–PART C, PROTECTION OF NATURAL RESOURCES, ARTICLE III, WATER RESOURCES, CHAPTER 102, EROSION CONTROL.

23. THE EROSION AND SEDIMENT CONTROL MEASURES ARE FOR THE INSTALLATION, MAINTENANCE AND MEASURES TO CONTROL EROSION AND SEDIMENTATION ONLY. REFER TO APPROPRIATE PLAN SHEETS FOR ALL UTILITY, STORMWATER, SITE IMPROVEMENT, AND OTHER CONSTRUCTION INFORMATION.

24. THE CONTRACTOR WILL BE RESPONSIBLE FOR THE REMOVAL OF ANY EXCESS MATERIAL AND MAKE SURE SITE(S) RECEIVING THE EXCESS HAS AN APPROVED EROSION CONTROL PLAN THAT MEETS THE CONDITIONS OF CHAPTER 102 AND/OR OTHER STATE, FEDERAL REGULATIONS.

25. ALL BUILDING MATERIALS AND WASTES MUST BE REMOVED FROM THE SITE AND RECYCLED OR DISPOSED IN ACCORDANCE WITH THE DEPARTMENT'S REGULATIONS § AT 25 PA. CODE 280.1 ET. SEQ., § 287.1 ET. SEQ. § 271.1 ET. SEQ.. NO BUILDING MATERIAL AND OR WASTES OR UNUSED BUILDING MATERIALS SHALL BE BURIED, DUMPED, OR DISCHARGED AT THE SITE.

26. THE CONTRACTOR MUST ENSURE THAT VISUAL SITE INSPECTIONS ARE CONDUCTED WEEKLY AND AFTER EACH PRECIPITATION EVENT BY A QUALIFIED PERSON TRAINED AND EXPERIENCED IN EROSION AND SEDIMENT CONTROL, TO ASCERTAIN THAT THE BMPs ARE OPERATIONAL AND EFFECTIVE IN PREVENTING POLLUTION TO THE WATERS OF THE COMMONWEALTH. A WRITTEN REPORT OF EACH INSPECTION SHALL BE KEPT AND INCLUDE:

26.1. SUMMARY OF SITE CONDITION, BMPs (BEST MANAGEMENT PRACTICES) AND COMPLIANCE

26.2. THE DATE, TIME AND THE NAME OF THE PERSON CONDUCTING THE INSPECTION.

27. IF BMPs ARE FOUND TO BE INOPERATIVE OR INEFFECTIVE DURING AN INSPECTION, OR ANY OTHER TIME, THE PERMITTEE AND/OR CO–PERMITTEE SHALL IMMEDIATELY CONTACT THE DISTRICT. DOCUMENTATION SHOULD INCLUDE WHAT STEPS ARE BEING TAKEN TO REDUCE, ELIMINATE AND PREVENT RECURRENCE OF THE PROBLEM.THE CONTRACTOR SHALL TAKE ALL REASONABLE STEPS TO MINIMIZE OR PREVENT ANY DISCHARGE IN VIOLATION OF THIS PERMIT WHICH HAS A REASONABLE LIKELIHOOD OF ADVERSELY AFFECTING HUMAN HEALTH OR ENVIRONMENT.

INSPECTION AND MAINTENANCE:

1. ALL EROSION AND SEDIMENTATION CONTROL FACILITIES SHALL BE INSPECTED WEEKLY AND AFTER EACH MEASURABLE RAIN EVENT.

2. FABRIC FENCES: REPAIR DAMAGE TO FENCES. BACKFILL UNDERCUTTING. OVERTOPPED AREAS SHALL BE REPLACED WITH AN OUTLET ROCK FILTER. IF SEDIMENT REACHES ONE HALF THE FENCE HEIGHT, IT SHALL BE REMOVED AND PLACED IN THE TOPSOIL AND FILL STOCKPILE AREA. REPLACEMENT FENCE AND STAKES SHALL BE KEPT ON SITE.

3. CONSTRUCTION ENTRANCE: WHEN UTILIZED, INSPECTED DAILY. EXCESS SEDIMENT SHALL BE REMOVED AND STORED IN THE TOPSOIL AND FILL STOCKPILE AREA AND USED AS FILL OR ROAD SUBBASE. A STOCKPILE OF REPLACEMENT ROCK SHALL BE KEPT ON SITE.

4. CATCH BASIN: REPLACE SILT SACKS WHEN FULL. THE SEDIMENT SHALL BE PLACED IN THE TOPSOIL AND FILL STOCKPILE AREA. EXTRA SILT SACKS MUST BE KEPT ON SITE. FILTER FABRIC PROTECTION TREAT AS FABRIC FENCE.

5. ROCK FILTERS: WHEN UTILIZED, REPLACE WHEN CLOGGED WITH SEDIMENT. KEEP A STOCKPILE OF REPLACEMENT ROCK ON SITE. CLOGGED FILTER ROCK MAY BE STORED IN THE TOPSOIL AND FILL STOCKPILE AREA AND USED AS FILL OR ROAD SUBBASE.

6. SEDIMENT TRAPS: WHEN UTILIZED, REMOVE SEDIMENT WHEN IT REACHES THE REMOVAL MARK ON THE INDICATOR STAKE AND PLACE IT IN THE TOPSOIL AND FILL STOCKPILE AREA CHECK EMBANKMENT FOR PIPING, EROSION OR OVERTOPPING AND REPAIR AS NEEDED. INSPECT OUTLET STRUCTURE, CLEAN OF ANY DEBRIS, AND REPAIR AS NEEDED.

SITE RESTORATION:

1. ALL DISTURBED PROPERTY SHALL BE RESTORED TO ITS PRE–CONSTRUCTION CONDITION, AS NEAR AS POSSIBLE WITHIN 20 DAYS OF DISTURBANCE.

2. ONCE AN AREA IS GRADED TO ITS FINAL GRADE, IT MUST BE STABILIZED WITH THE PERMANENT SEED MIX SPECIFICATION ACCORDING TO ITS SLOPE.

ESC GENERAL NOTES:

1. THE CONTRACTOR SHALL BE RESPONSIBLE FOR THE INSTALLATION, MAINTENANCE AND SUBSEQUENT REMOVAL OF SEDIMENTATION AND EROSION CONTROL MEASURES AS SHOWN ON THE PLANS AS OUTLINED HEREIN. AND IN ACCORDANCE WITH THE REQUIREMENTS OF THE COUNTY SOIL CONSERVATION DISTRICT AND THE PENNSYLVANIA DEPT. OF ENVIRONMENTAL PROTECTION.

2. ALL EROSION CONTROL MEASURES SHOWN ON THE EROSION AND SEDIMENTATION CONTROL PLAN ARE TO BE INSTALLED PRIOR TO BEGINNING ANY OTHER EARTH DISTURBING ACTIVITY.

3. EROSION AND SEDIMENT BMPs (BEST MANAGEMENT PRACTICES) MUST BE CONSTRUCTED, STABILIZED, AND FUNCTIONAL BEFORE SITE DISTURBANCE BEGINS WITHIN THE TRIBUTARY AREAS OF THOSE BMPs.

4. THE CONTRACTOR SHALL BE RESPONSIBLE FOR MAKING INSPECTIONS OF ALL EROSION CONTROL DEVICES ON A WEEKLY BASIS AND AFTER ALL STORMS THAT PRODUCE MORE THAN ONE–HALF (1/2") INCH TOTAL RAINFALL. ANY NEEDED REPAIRS SHALL BE PERFORMED IMMEDIATELY. THE CONTRACTOR SHALL DOCUMENT ALL INSPECTIONS AND ANY REPAIRS THAT ARE DONE TO MAINTAIN EFFICIENCY. COPIES OF EROSION CONTROL INSPECTION REPORTS SHALL BE SUBMITTED TO THE COUNTY SOIL CONSERVATION DISTRICT.

5. AFTER FINAL SITE STABILIZATION HAS BEEN ACHIEVED, TEMPORARY EROSION AND SEDIMENT BMPs MUST BE REMOVED. AREAS DISTURBED DURING REMOVAL OF THE BMPs MUST BE STABILIZED IMMEDIATELY.

6. STOCKPILE HEIGHTS MUST NOT EXCEED 35 FEET. STOCKPILE SLOPES MUST BE 2:1 OR FLATTER.

7. A SILT FENCE SHALL BE INSTALLED AROUND THE PERIMETER OF ALL SOIL STOCKPILED.

8. UNTIL THE SITE IS STABILIZED, ALL EROSION AND SEDIMENT BMPs MUST BE MAINTAINED PROPERLY. MAINTENANCE MUST INCLUDE INSPECTIONS OF ALL EROSION AND SEDIMENT BMPs AFTER EACH RUNOFF EVENT AND ON A WEEKLY BASIS. ALL PREVENTATIVE AND REMEDIAL MAINTENANCE WORK, INCLUDING CLEAN OUT, REPAIR, REPLACEMENT, REGRADING, RESEEDING, REMULCHING AND RENETTING MUST BE PERFORMED IMMEDIATELY. IF EROSION AND SEDIMENT CONTROL BMPs FAIL TO PERFORM AS EXPECTED, REPLACEMENT BMPs, OR MODIFICATIONS OF THOSE INSTALLED WILL BE REQUIRED.

OPERATOR'S RESPONSIBILITIES:

1. OPERATORS MUST USE ENVIRONMENTAL DUE DILIGENCE TO ENSURE THAT THE FILL MATERIAL ASSOCIATED WITH THIS PROJECT QUALIFIES AS CLEAN FILL. DEFINITIONS OF CLEAN FILL AND ENVIRONMENTAL DUE DILIGENCE ARE PROVIDED BELOW.

1.1. CLEAN FILL IS DEFINED AS: UNCONTAMINATED, NON–WATER SOLUBLE, NON–DECOMPOSABLE, INERT, SOLID MATERIAL. THE TERM INCLUDES SOIL, ROCK, STONE, DREDGED MATERIAL, USED ASPHALT, AND BRICK, BLOCK OR CONCRETE FROM CONSTRUCTION AND DEMOLITION ACTIVITIES THAT IS SEPARATE FROM OTHER WASTE AND IS RECOGNIZABLE AS SUCH. THE TERM DOES NOT INCLUDE MATERIALS PLACED IN OR ON THE WATERS OF THE COMMONWEALTH UNLESS OTHERWISE AUTHORIZED. (THE TERM "USED ASPHALT" DOES NOT INCLUDE MILLED ASPHALT THAT HAS BEEN PROCESSED FOR RE–USE.) REFER TO STANDARD DETAILS AND PROJECT MANUAL FOR SPECIFIC PROJECT REQUIREMENTS.

1.2. ENVIRONMENTAL DUE DILIGENCE: INVESTIGATIVE TECHNIQUES, INCLUDING, BUT NOT LIMITED TO, VISUAL PROPERTY INSPECTIONS, ELECTRONIC DATA BASE SEARCHES, REVIEW OF PROPERTY OWNERSHIP, REVIEW OF PROPERTY USE HISTORY, SANBORN MAPS, ENVIRONMENTAL QUESTIONNAIRES, TRANSACTION SCREENS, ANALYTICAL TESTING, ENVIRONMENTAL ASSESSMENTS OR AUDITS. ANALYTICAL TESTING IS NOT A REQUIRED PART OF DUE DILIGENCE UNLESS VISUAL INSPECTION AND/OR REVIEW OF THE PAST LAND USE OF THE PROPERTY INDICATES THAT THE FILL MAY HAVE BEEN SUBJECTED TO A SPILL OR RELEASE OF REGULATED SUBSTANCE. IF THE FILL MAY HAVE BEEN AFFECTED BY A SPILL OR RELEASE OF A REGULATED SUBSTANCE, IT MUST BE TESTED TO DETERMINE IF IT QUALIFIES AS CLEAN FILL. TESTING SHOULD BE PERFORMED IN ACCORDANCE WITH APPENDIX A OF THE DEPARTMENT'S POLICY "MANAGEMENT OF FILL".

2. FILL MATERIAL THAT DOES NOT QUALIFY AS CLEAN FILL IS REGULATED FILL. REGULATED FILL IS WASTE AND MUST BE MANAGED IN ACCORDANCE WITH THE DEPARTMENT'S MUNICIPAL OR RESIDUAL WASTE REGULATIONS BASED ON 25 PA CODE CHAPTERS 287 RESIDUAL WASTE MANAGEMENT OR 271 MUNICIPAL WASTE MANAGEMENT, WHICHEVER IS APPLICABLE.

PENNDOT PUBLICATION 72M REFERENCES:

1. RC–70M – PERIMETER CONTROL DEVICES
2. RC–72M – INLET AND OUTLET PROTECTION
3. RC–75M – DEWATERING DEVICES
4. RC–76M – STRAW BALE BARRIER
5. RC–77M – ROCK CONSTRUCTION ENTRANCE

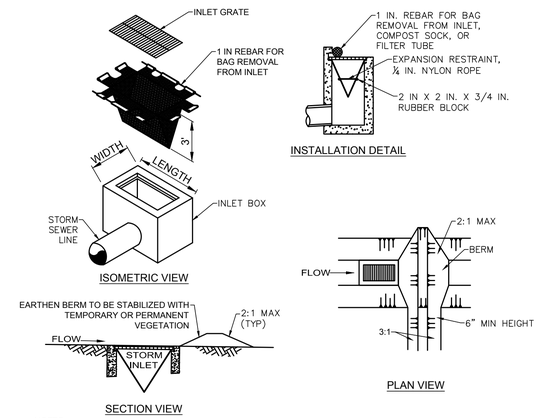

NOTES:

MAXIMUM DRAINAGE AREA = 1/2 ACRE.

INLET PROTECTION SHALL NOT BE REQUIRED FOR INLET TRIBUTARY TO SEDIMENT BASIN OR TRAP. BERMS SHALL BE REQUIRED FOR ALL INSTALLATIONS.

ROLLED EARTHEN BERM SHALL BE MAINTAINED UNTIL ROADWAY IS STONED. ROAD SUBBASE BERM SHALL BE MAINTAINED UNTIL ROADWAY IS PAVED. SIX INCH MINIMUM HEIGHT ASPHALT BERM SHALL BE MAINTAINED UNTIL ROADWAY SURFACE RECEIVES FINAL COAT.
AT A MINIMUM, THE FABRIC SHALL HAVE A MINIMUM GRAB TENSILE STRENGTH OF 120 LBS, A MINIMUM BURST STRENGTH OF 200 PSI, AND A MINIMUM TRAPEZOIDAL TEAR STRENGTH OF 50 LBS. FILTER BAGS SHALL BE CAPABLE OF TRAPPING ALL PARTICLES NOT PASSING A NO. 40 SIEVE.

INLET FILTER BAGS SHALL BE INSPECTED ON A WEEKLY BASIS AND AFTER EACH RUNOFF EVENT. BAGS SHALL BE EMPTIED AND RINSED OR REPLACED WHEN HALF FULL OR WHEN FLOW CAPACITY HAS BEEN REDUCED SO AS TO CAUSE FLOODING OR BYPASSING OF THE INLET. DAMAGED OR CLOGGED BAGS SHALL BE REPLACED. A SUPPLY SHALL BE MAINTAINED ON SITE FOR REPLACEMENT OF BAGS. ALL NEEDED REPAIRS SHALL BE INITIATED IMMEDIATELY AFTER THE INSPECTION. DISPOSE OF ACCUMULATED SEDIMENT AS WELL AS ALL USED BAGS ACCORDING TO THE PLAN NOTES.

DO NOT USE ON MAJOR PAVED ROADWAYS WHERE PONDING MAY CAUSE TRAFFIC HAZARDS.

FOR TYPE C INLET, REFER TO PENNDOT RC–72M.

FILTER BAG INLET PROTECTION TYPE M OR ODOT TYPE 2-2B INLET

NOT TO SCALE

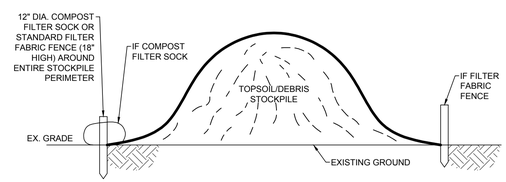

TOPSOIL/DEBRIS STOCKPILE

NOT TO SCALE

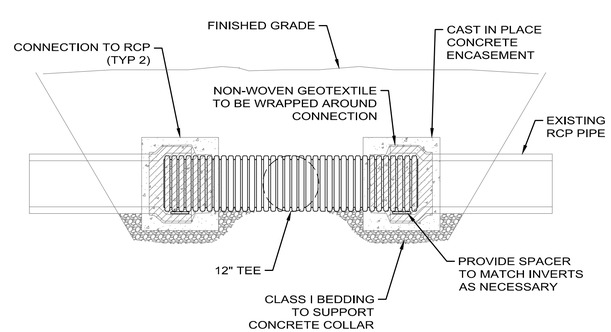

STORMWATER TEE CONNECTION

NOT TO SCALE

PERMANENT SEED MIX:

SEED TYPE	GERMINATION RATE/APPLICATOIN RATE
SUN SEED MIXTURE	(7/GERMINATION RATE) LBS PER 1,000 S.F.
25% PANTHER GLS P. RYEGRASS	85%
25% PALMER III P. RYEGRASS	90%
15% ARC KENTUCKY BLUEGRASS	88%
15% GUINNESS KENTUCKY BLUEGRASS	88%
10% DIVA KENTUCKY BLUEGRASS	X
10% DOUBLE TIME P. RYEGRASS	X
SHADE SEED MIXTURE	(7/GERMINATION RATE) LBS PER 1,000 S.F.
50% SPARTAN II HARD FESCUE	85%
30% WINDWARD CHEWING FESCUE	90%
20% SEVILLE 3 PERENNIAL RYEGRASS	88%
OR	
33% NIGHTSKY P. RYEGRASS	88%
33% SEVILLE 3 P. RYEGRASS	X
33% EXPRESS II P. RYEGRASS	X

FERTILIZER: 0–20–20, APPLICATION RATE: 15 LBS/1,000 SF
FERTILIZER: 10–20–20, APPLICATION RATE: 15 LBS/1,000 SF
LIMING RATE: 150 LBS/1,000 SF
MULCH: STRAW
MULCHING RATE: 140 LBS/1,000 SF
SLOPES EXCEEDING 3:1, MULCH W/ EROSION CONTROL FABRIC
SEEDING SEASONS: MARCH 15 – JUNE 1 & AUG. 1 – OCT. 15

TEMPORARY SEED MIX:

SPECIES: ANNUAL RYE
% PURE LIVE SEED: 98
APPLICATION RATE: 50 LBS/ACRE
FERTILIZER: 10–20–20
FERTILIZER APPLICATION RATE: 680 LBS/ACRE

LIMING RATE: 2.0 TON/ACRE
MULCH: STRAW
MULCHING RATE: 3.0 TON/ACRE

COMMONWEALTH OF PENNSYLVANIA REGISTERED PROFESSIONAL ENGINEER
JAN ALEXANDER CARFOLI
PE-075360

your trusted advisor
consultants engineers architects planners

NO	REVISION	DATE

ISSUED FOR:	DESIGN
ISSUE DATE:	4/10/2019
SCALE:	AS SHOWN
DESIGNED BY:	PMT
DRAWN BY:	PMT
CHECKED BY:	IAG

CITY OF HERMITAGE
SOUTH DARBY ROAD STORMWATER AND ROADWAY IMPROVEMENTS PROJECT
HERMITAGE, PENNSYLVANIA

EROSION & SEDIMENTATION CONTROL NOTES

PROJECT NO. 181039
DISCIPLINE CIVIL
SHEET NAME ESC-1
SHEET 16 OF 25